Parts Catalog



SP20

Mixer

Model: SP20

11/10/2025 Rev. D
IMPORTANT!
TO EXPEDITE SHIPMENT OF PARTS, ALWAYS SPECIFY MODEL, REV, PART NUMBER, AND SERIAL NUMBER OF UNIT.

GLOBE FOOD EQUIPMENT COMPANY

2215 East River Road
Dayton, Ohio 45439

Parts Department
Toll Free 1-800-745-6238
E-Mail: info@globefoodequip.com
Website: www.globefoodequip.com

Not for resale

© Globe Food Equipment Company, 2025

Table of Contents

Description	Page
SP20 Base Components	4
SP20 Head Components	8
SP20 Hub Components	10
SP20 Planetary Components	12
SP20 Gearbox Components	14
SP20 Motor Components	18
SP20 Manual and Digital Timer Components	20
SP20 Bowl Scraper Components	22
SP20 Wiring Diagram	24

SP20 Base Components

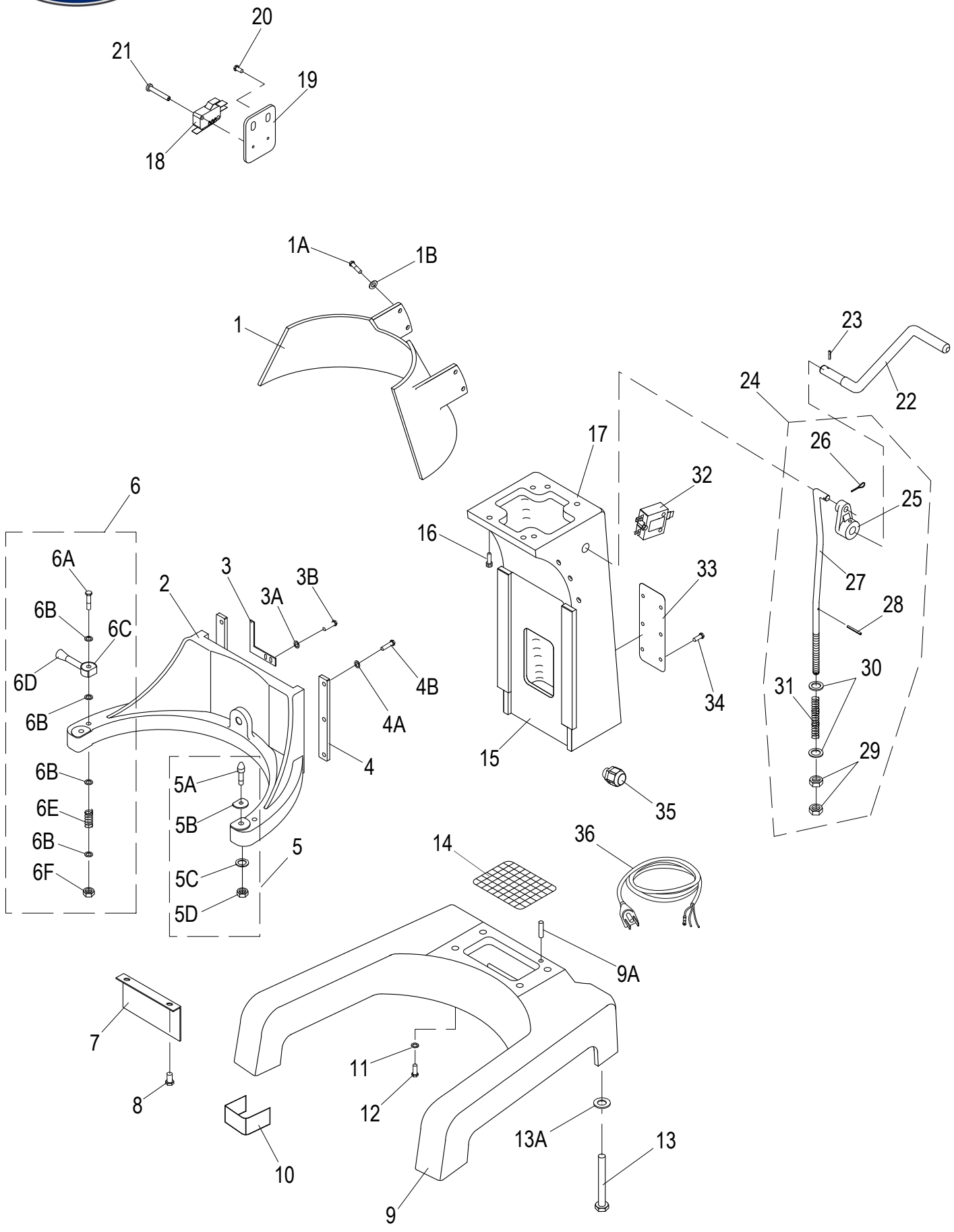

© Globe Food Equipment Company

SP20 Base Components

Item	Part Number	Description	Qty	Serial Number
1	X20023	Rear Guard	1	
1A	X25097	External Hex Hd Screw M6-1.0X16mm, Zinc	4	
1B	X25069	Thick Flat Washer, Zinc M6, OD-24mm, TH-3mm	4	
2	X20021-DG	Bowl Cradle	1	
3	X10190	Touch Plate	1	
3A	H00551	Lock Washer	2	
3B	X80J14	Flat Washer, SS, M6, OD-12mm, TH-1mm	2	
4	X20022	Slide Guide	2	
4A	X08008	Lock Washer, Zinc M6, OD-12mm, TH-2mm	6	
4B	X25097	External Hex Hd Screw M6-1.0X16mm, Zinc	6	
5	X20087	Dowel Screw Kit (Incls. items 5A-5D)	2	
5A		Dowel Screw	2	
5B	X01759	Flat Washer M8, ID-8.4, OD-24, TH-2mm	2	
5C	H00335	Lock Washer M8, ID-8.4, OD-15, TH-0.8mm Zn	2	
5D	X10088	Acorn Nut, SS M8-1.25, OD-13mm, TH-15mm	2	
6	X10020	Bowl Clamp Kit (2/Set)	1	
6A	X20086	Ext. Hex Hd Screw M8-1.25x80mm, Zn	2	
6B	X10189	Flat Washer-Zinc M8, OD-12mm, TH-1mm	8	
6C	X10020-1	Bowl Clamp (2/Set)	1	
6D		Bowl Clamp Handle	2	
6E		Spring	2	
6F	X08074	Lock Nut, SS M8-1.25, OD-13mm, HT-8mm	2	
7	X20143	Cradle Cover	1	
8	X40056	Truss Hd Screw PHH M6-1.0x10mm, SS-18	2	
9	X20024-DG	Base	1	
9A		Dowel Pin Ø8x16mm	2	
10	X10136	Foot Kit (4/Set)	4	
11	X10034	Flat Washer, Zinc M10, OD-20mm, Th-2mm	4	
12	H01022	Screw M10x40mm Hex Head	4	
13	X10025	Ext. Hex Hd Screw M10-1.5x60mm, Zinc	4	
13A	X10034	Flat Washer, Zinc M10, OD-20mm, Th-2mm	4	
14	X20031	Screen	1	
15	X20035-1-DG	Column	0	
16	X08077	Cap Hd Screw, 5/16"-18x1"	4	
17	X91014	Hazardous Voltage Label (Not Shown)	1	
18	X10057	Microswitch	1	
19	X20154	Bracket	1	
20	X40056	Truss Hd Screw PHH M6-1.0x10mm, SS-18	2	
21	X30218	Pan Head Screw, Phillips M4-0.7x25mm	2	
22	X20040	Bowl Lift Arm	1	
23	X10039	Dowel Pin (1/2 Knurled), B.O. OD-5mm/5.25mm, L-30mm	1	
24	X20037A	Bowl Lift Kit	1	
25		Bowl Lift Cam	1	
26		Cotter Pin	1	
27		Bowl Lift Rod	1	
28		Roll Ø3x28mm Pin	1	
29	H00341	Nut	2	
30		Washer	2	
31		Spring	1	
32	X10027-2	Reset Switch	1	
33	X20191	Plate	1	
34	X25051	Round Head Screw, Phillips #10-24X1/4", SS	6	
35	X03111	Strain Relief	1	

© Globe Food Equipment Company

SP20 Base Components

Item	Part Number	Description	Qty	Serial Number
36	X02739	Power Cord	1	
37	X80J11	Terminal Block (Not Shown)	1	

© Globe Food Equipment Company

INTENTIONALLY LEFT BLANK PAGE

© Globe Food Equipment Company

SP20 Head Components

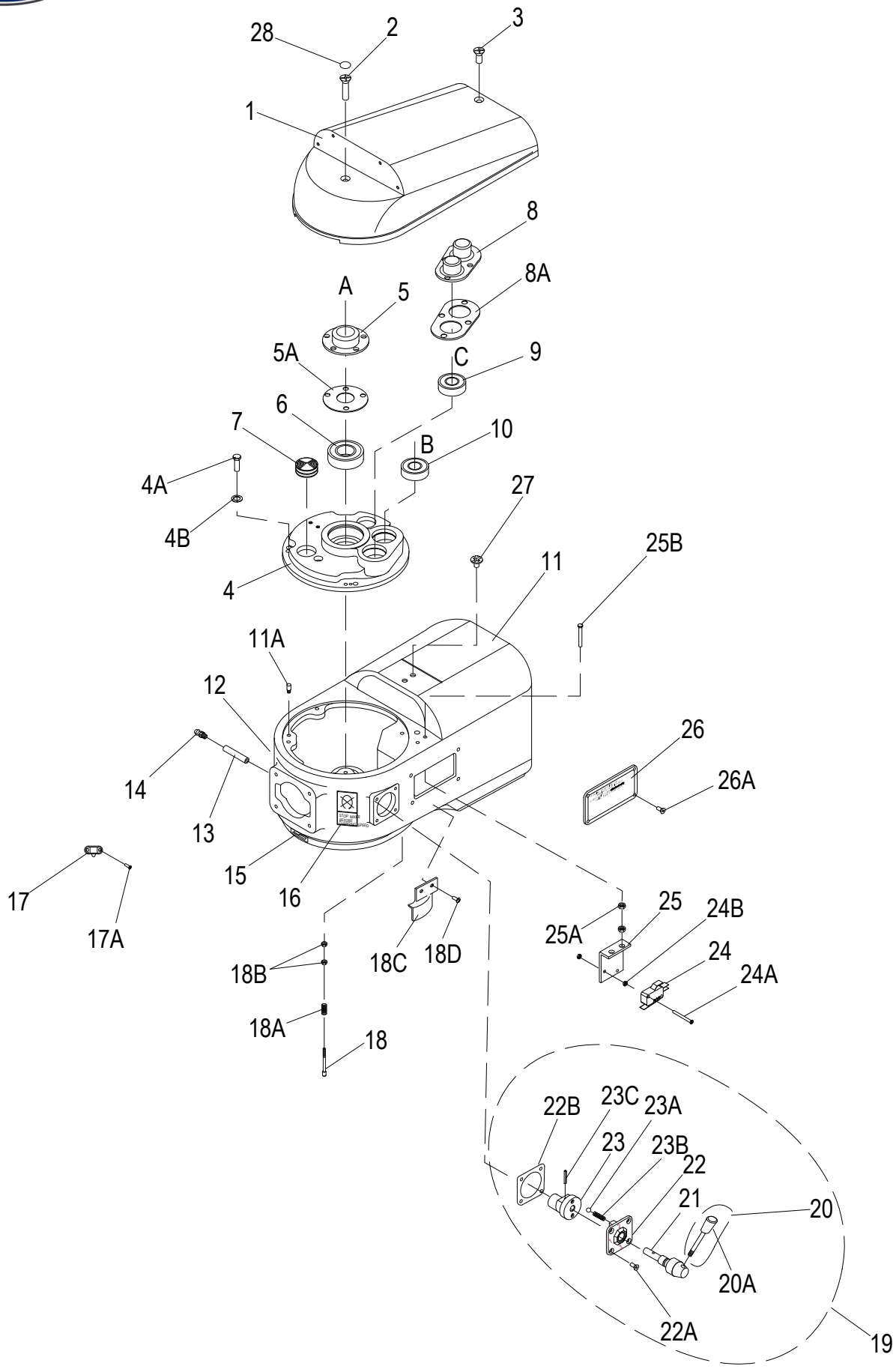

© Globe Food Equipment Company

SP20 Head Components

Item	Part Number	Description	Qty	Serial Number
1	X10001-2-DG	Top Cover	1	
2	X10180	Flat Hd Screw-PHH 1/4"-20x1.25", Zinc	1	
3	X10181	Flat Hd Screw-PHH 1/4"-20x0.75", Zinc	1	
4	X10074	Gear Cover	1	
4A	X80H50	External Hex Hd Screw, B.O. M6-1.0X16mm	4	
4B		Washer M6 Split Lock	4	
5	X10072	Cap	1	
5A	X10187	Gasket	1	
6	X10010	Bearing (6203Z)	1	
7	X10073	Oil Plug	1	
8	X10071	Twin Cap	1	
8A	X10188	Gasket	1	
9	X10068	Bearing (6201Z)	1	
10	X10068	Bearing (6201Z)	1	
11	X10059-1	Transmission Case	1	
11A		Locating Pin Ø8xM6x10mm	2	
12	X91009	Gear Maintenance Label	1	
13	X10217	Grease Tube w/o Zert	1	
14	X10900	Grease Fitting	1	
15	X91012	Arrow Label	1	
16	X91010	Gear Damage Label	1	
17	X10134	Spring Lock Assembly	1	
17A	X10134B	Round Hd Screw-PHH M3-0.5x8mm, SS	2	
18	X10043N	Nylon Touch Shaft Kit	1	
18A	X30095	Spring	1	
18B	X30186	Hex Nut, Zinc M5-0.8 OD-8, TH-4mm	2	
18C	X20516	Cover	1	
18D	H02533	Truss Hd Screw-Combo M5x8mm, Zn	2	
19	X10045-48	Gear Shift Kit	1	
20	X10045	Arm With Knob	1	
20A	X10045-1	Knob	1	
21		Shaft	1	
22		Cover	1	
22A	X25166	Flat Hd Screw-PHH M5-0.8x16mm, Zinc	4	
22B	X10199	Gasket	1	
23		Shaft Bias	1	
23A		Roller	2	
23B		Spring	2	
23C		Roll Ø3x28mm Pin	1	
24	X10057	Microswitch	1	
24A	X08156	Cheese Hd Screw, Phillips M3-0.5x16mm,SS	2	
24B	X08155	Thin Hex Nut, M3-0.5, OD-5.5mm, TH-2mm	4	
25	X10058	Bracket	1	
25A	X08015	Lock Nut, Zinc M6-1.0, OD-10mm, TH-6mm	4	
25B	X80116	Screw	2	
26	X10055	Injury Warning Plate	1	
26A	X25060	Pan Head Screw, Phillips M4-0.7X6mm, SS	4	
27	X10131	Rd Hd Screw-PHH #10-24x3/8", Zinc	1	
28	X03161	Screw Cover	2	

© Globe Food Equipment Company

SP20 Hub Components

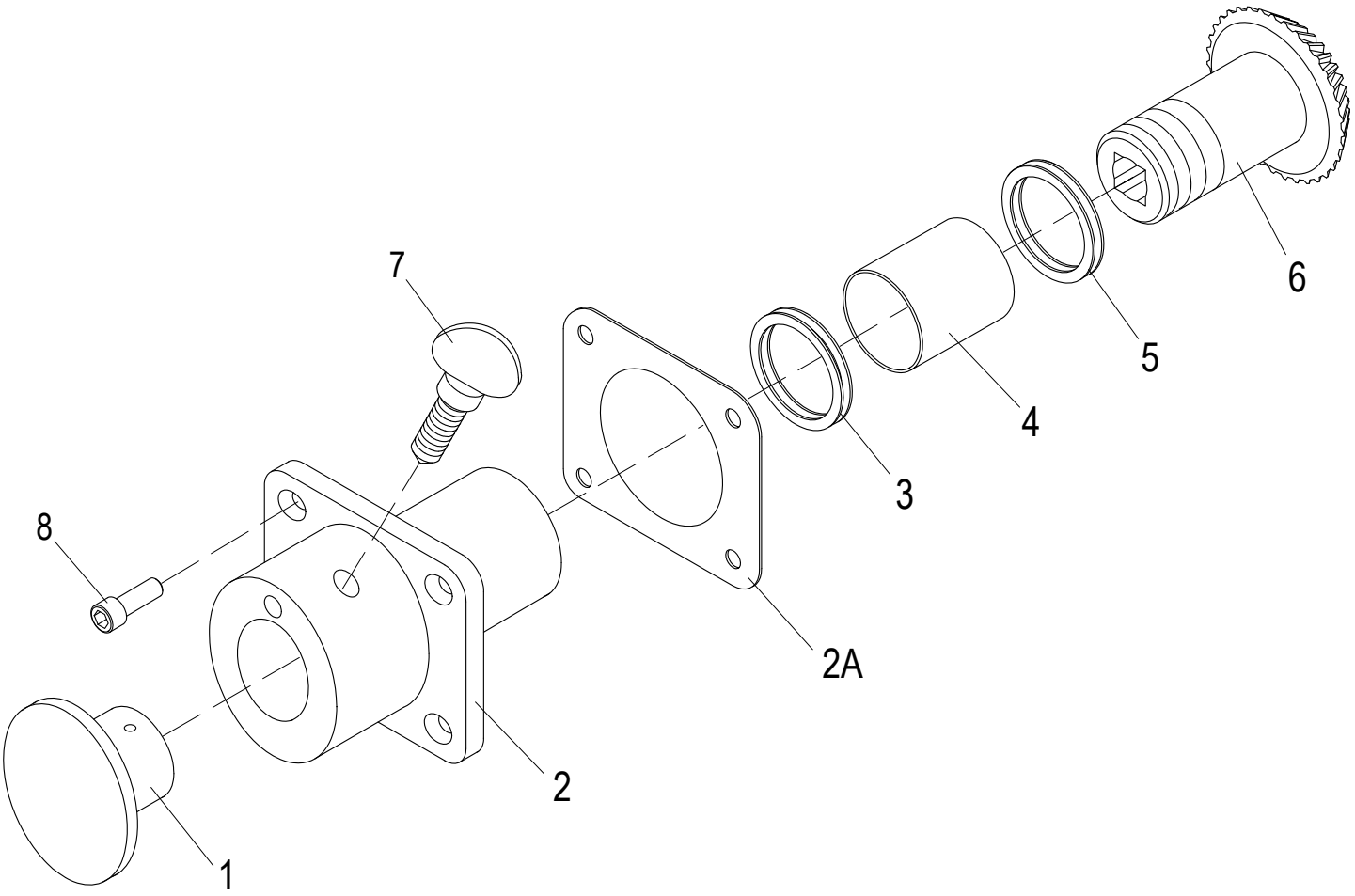

© Globe Food Equipment Company

SP20 Hub Components

Item	Part Number	Description	Qty	Serial Number
1	X10007	Hub Plug	1	
2	X10006-DG	Hub Assembly	1	
2A	X10006	Gasket	1	
3	X10089	Oil Seal ID-35mm, OD-45mm, TH-8mm	1	
4	X10075	Needle Bearing	1	
5	X30018-1	Flat Washer, Zinc ID-35mm, OD-55mm, TH-1mm	2	
6	X10003	Level Gear (35T)	1	
7	X10005	Thumb Screw (TS 1/2"-#12)	1	
8	X80B52	Cap Hd Screw, Hex, B.O., M6-1.0X20mm	4	

© Globe Food Equipment Company

SP20 Planetary Components

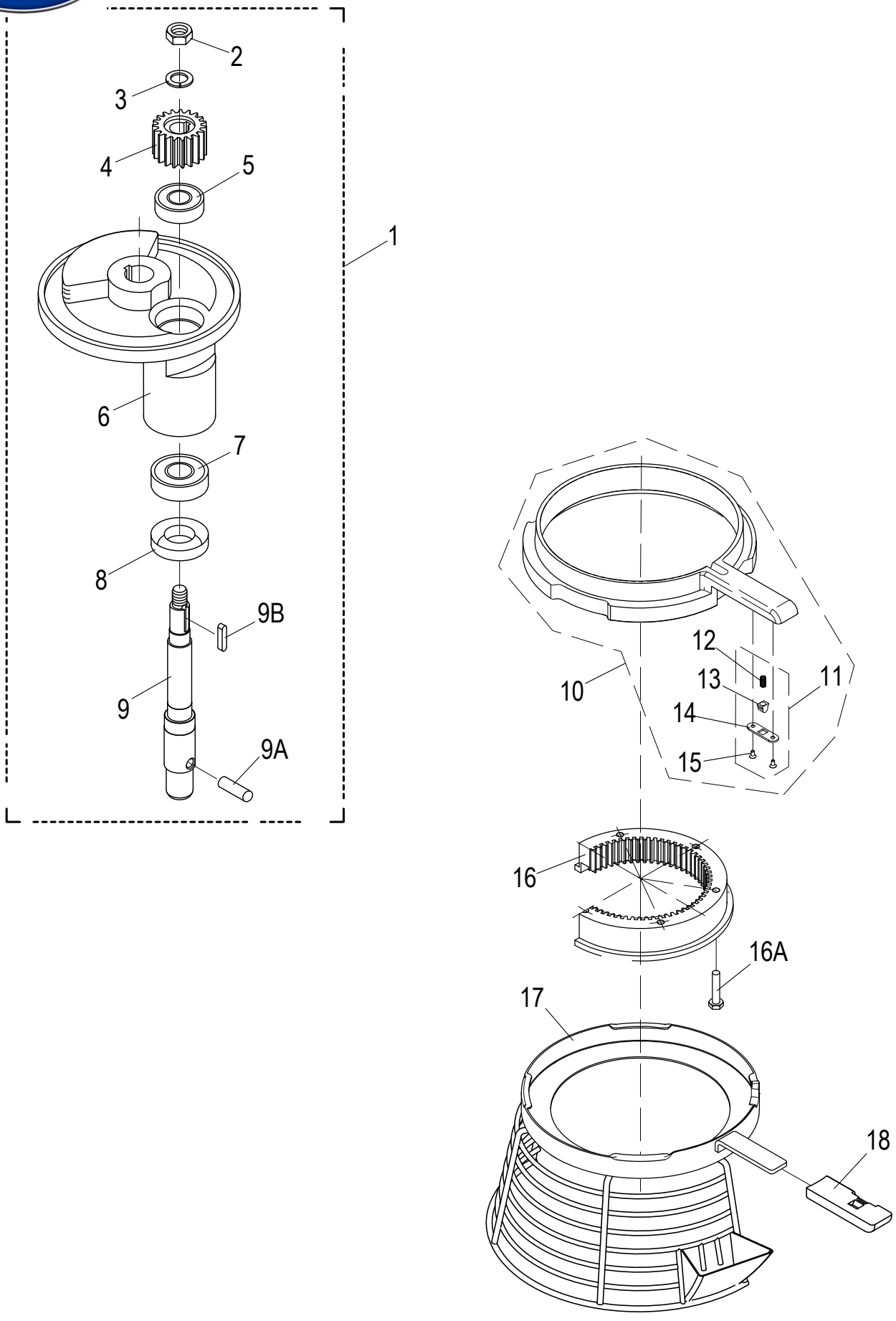

© Globe Food Equipment Company

SP20 Planetary Components

Item	Part Number	Description	Qty	Serial Number
1	X10008-82	Planetary Assembly	1	
2	X10008	Hex Nut, Zinc M12-1.25, OD-19mm, TH-10mm	1	
3	X01372	Lock Washer,SS M12, OD-21mm, TH-2.5mm	1	
4	X10009	Pinion Gear (19T)	1	
5	X10010	Bearing (6203Z)	1	
6	X10011-DG	Planetary Holder	1	
7	X10012	Bearing (6204Z)	1	
8	X10013	Oil Seal ID-25mm, OD-47mm, TH-10mm	1	
9	X10015	Planetary Shaft	1	
9A	X10080	Dowel Pin	1	
9B	X10014	Round End Key H-5mm, W-5mm, L-17mm	1	
10	X200S2	Slide Sheath	1	
11	X200S3	Spring Lock Kit	1	
12		Spring	1	
13		Plunger	1	
14		Plate, Plunger Retention	1	
15	X10134B	Round Hd Screw-PHH M3-0.5x8mm, SS	2	
16	X10078	Ring Gear (63T)	1	
16A	X10082	Cap Head Screw, Hex 1/4"-20X1.00", B.O	6	
17	X200S1	Removable Bowl Guard	1	
18	X20504	Plastic Handle	1	

© Globe Food Equipment Company

SP20 Gearbox Components

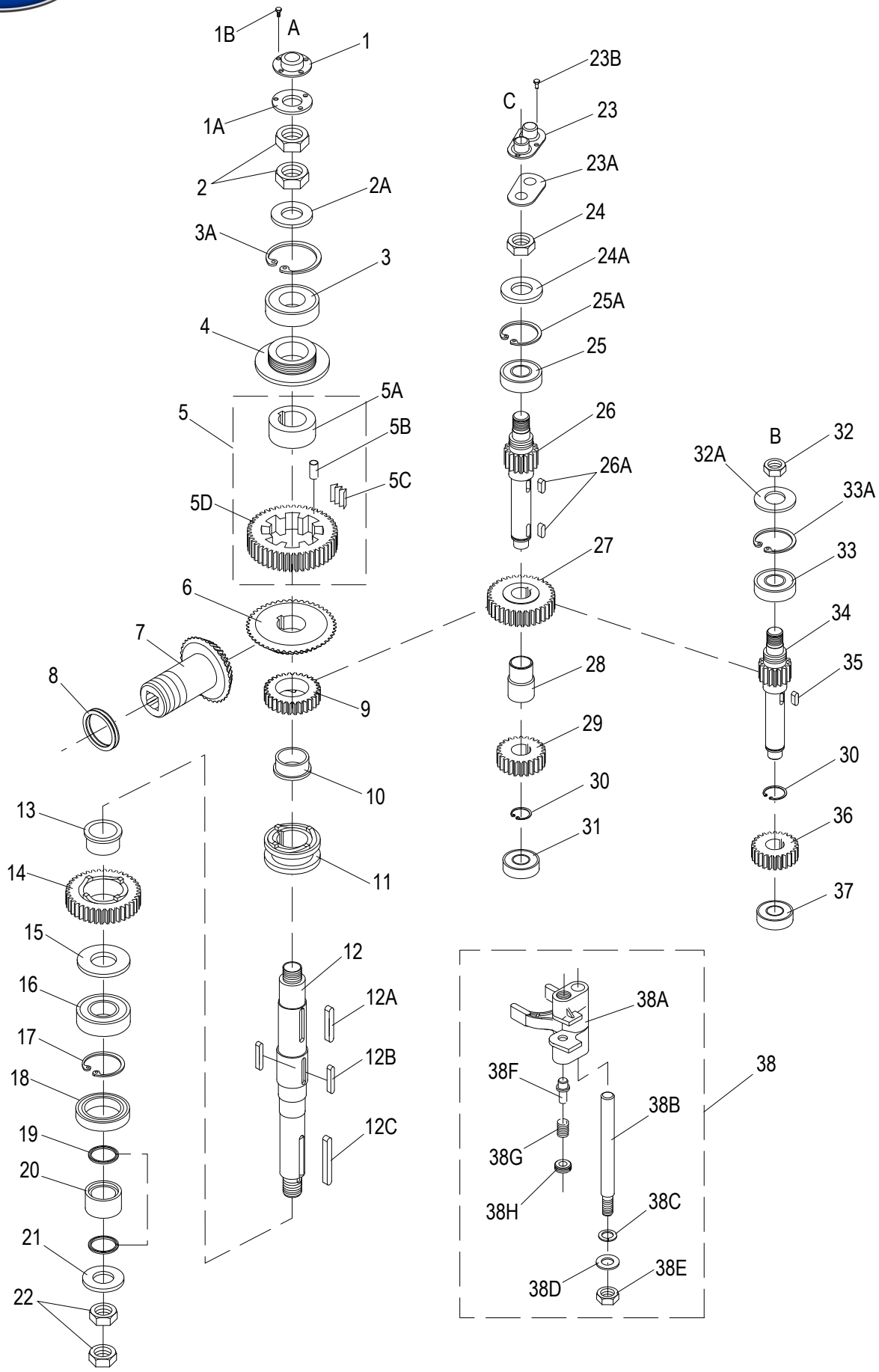

© Globe Food Equipment Company

SP20 Gearbox Components

Item	Part Number	Description	Qty	Serial Number
1	X10072	Cap	1	
1A	X10187	Gasket	1	
1B	X10133	Pan Hd Screw-PHH M6-1.0x10mm, SS	4	
2	X10132	Thin Hex Nut 1/2-20, OD-1/2", TH-11/64" Zn	2	
2A		Washer 1/2" Flat	1	
3	X10010	Bearing (6203Z)	1	
3A		Retaining Ring	1	
4	X10090	Lead-In Oil Pad	1	
5	X10091-94	Slow Speed Gear Assembly (46T)	1	
5A	X10091	Bushing	1	
5B		Dowel Ø8x16mm Pin	1	
5C	X10093	Gear Spring Kit (8/Set)	1	
5D		Gear, Slow Speed (46T)	1	
6	X10095	Bevel Gear (46T)	1	
7	X10003	Level Gear (35T)	1	
8	X30018-1	Flat Washer, Zinc ID-35mm, OD-55mm, TH-1mm	1	
9	X10096	Clutch Gear (29T)	1	
10	X10097	Bushing	1	
11	X10110	Clutch Sleeve	1	
12	X10107	Drive Shaft	1	
12A	X10098	Round End Key H-6mm, W-6mm, L-28mm	1	
12B	X10109	Round End Key H-5mm, W-5mm, L-32mm	1	
12C	X10108	Round End Key H-6mm, W-6mm, L-45mm	1	
13	X10097	Bushing	1	
14	X10100	Clutch Gear (38T)	1	
15	X10101	Heel	1	
16	X10102	Bearing (6205LU)	1	
17	X20214	Int. Retaining Ring ID-2", OD-2.210", TH-0.062", B.O.	1	
18	X10105	Oil Seal	1	
19	X10103	O-Ring ID-27mm, OD-28mm, TH-2mm	2	
20	X10104	Bushing	1	
21		Washer M20 Flat	1	
22	X10106	Thin Hex Nut 3/4"-16, OD-1-1/8", TH-27/64", Zn	2	
23	X10071	Twin Cap	1	
23A	X10188	Gasket	1	
23B	X10131	Rd Hd Screw-PHH #10-24x3/8", Zinc	4	
24	X10125	Thin Hex Nut, SS 3/8"-24, OD-1/2", TH-1/4"	1	
24A		Washer 3/8" Flat	1	
25	X10068	Bearing (6201Z)	1	
25A		Retaining Ring	1	
26	X10129	Transmission Shaft (15T)	1	
26A	X25143	Round End Key H-5mm, W-5mm, L-14mm	2	
27	X10126	Gear (32T)	1	
28	X10122	Bushing	1	
29	X10121	Gear (24T)	1	
30	X10120	Ext. Retaining Ring, B.O. ID-17mm, OD-19mm, TH-1mm	2	
31	X10117	Bearing (6201)	1	
32	X10125	Thin Hex Nut, SS 3/8"-24, OD-1/2", TH-1/4"	1	
32A		Washer	1	
33	X10068	Bearing (6201Z)	1	
33A		Retaining Ring #35	1	
34	X10124	Master Shaft (15T)	1	
35	X20123	Round End Key H-5mm, W-5mm, L-18mm	1	

© Globe Food Equipment Company

SP20 Gearbox Components

Item	Part Number	Description	Qty	Serial Number
36	X10118	Bronze Gear (29T)	1	
37	X10117	Bearing (6201)	1	
38	X10111-116	Shifter Yoke Kit	1	
38A		Yoke Shifter	1	
38B		Guide, Rod Shifter	1	
38C	H00527	Split Lock Washer	1	
38D	X10034	Flat Washer, Zinc M10, OD-20mm, Th-2mm	1	
38E	H03157	Hex Nut, SS	1	
38F		Plunger, Yoke Shifter	1	
38G		Spring, Retainer	1	
38H		Spring, Yoke Shifter	1	

© Globe Food Equipment Company

INTENTIONALLY LEFT BLANK PAGE

© Globe Food Equipment Company

SP20 Motor Components

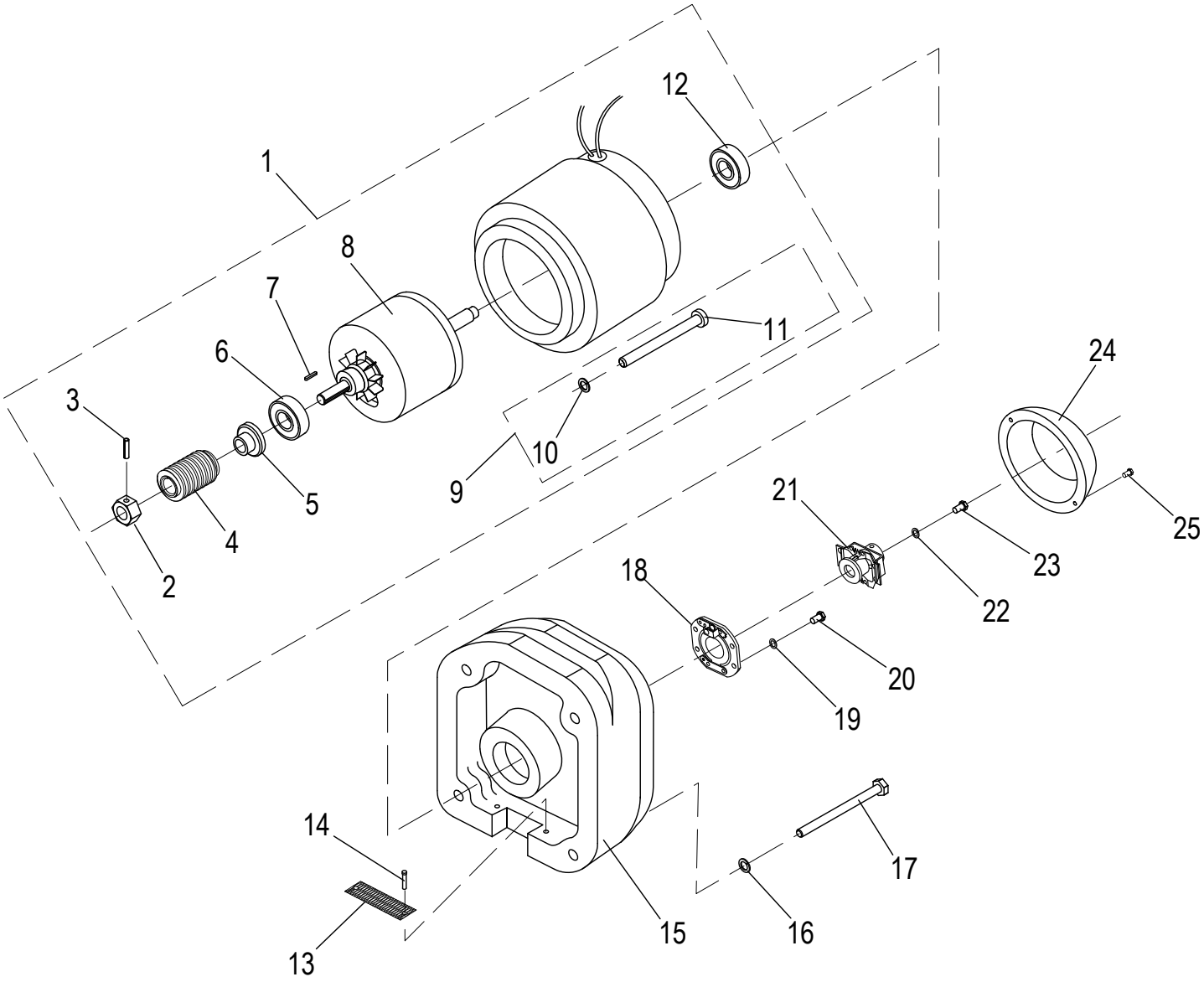

© Globe Food Equipment Company

SP20 Motor Components

Item	Part Number	Description	Qty	Serial Number
1	X20060-67	Motor Kit (120V/60HZ/1PH/6A)	1	
2	X20066	Hex Nut 7/16, OD-11/16", TH-3/8", Zn	1	
3	X20067	Slotted Spring Pin, B.O. OD-3mm, L-16mm, Th-1mm	1	
4	X20065	Worm Gear	1	
5	X20060	Bushing	1	
6	X08114	Bearing (6203LU)	1	
7	X20202	Round End Key H-3xW-3xL-18mm	1	
8		Motor Shaft	1	
8		Motor Coil	1	
9	X20206-207	Screw And Lock Washer Kit	1	
10		Lock Washer #10-24, OD 0.300"	4	
11		Screw #10-24 x 2.75"	4	
12	X10010	Bearing (6203Z)	1	
13	X20031	Screen	1	
14		Rivet	2	
15	X10054	Rear Cover	1	
16	1226	Washer M6 Split Lock	4	
17	X20161	Ext. Hex Hd Screw #1/4-20x2.25", Zn	4	
18	X10051	Platinum Switch	1	
19	X20207	Lock Washer, SS M5, OD-9mm, TH-2mm	2	
20	X10083	External Hex Hd Screw, SS, M5-0.8X10mm	2	
21	X10052	Clutch	1	
22	X20207	Lock Washer, SS M5, OD-9mm, TH-2mm	1	
23	X10083	External Hex Hd Screw, SS, M5-0.8X10mm	1	
24	X10053	Cover	1	
25	X10083	External Hex Hd Screw, SS, M5-0.8X10mm	2	
26	X20063	Fan (Not Shown)	1	

© Globe Food Equipment Company

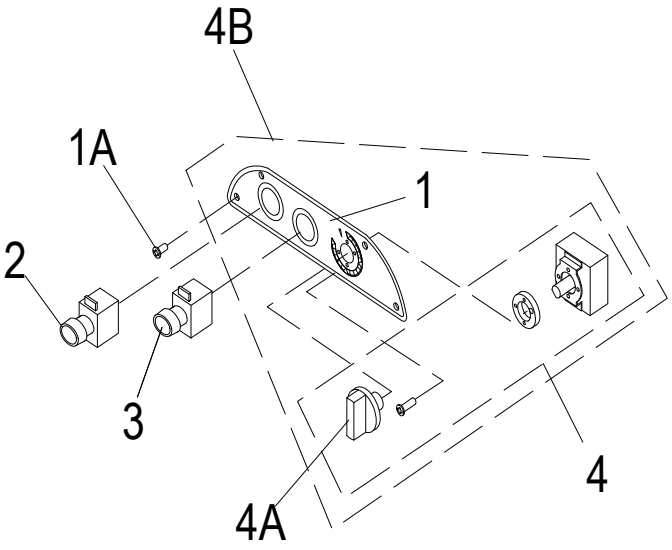

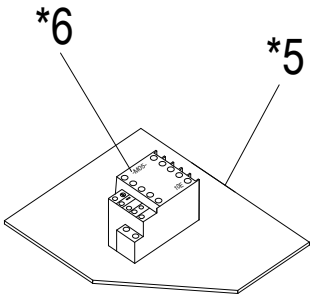

*ONLY USED ON MODELS WITH INTERNAL ELECTRICAL SYSTEM.

MANUAL TIMER

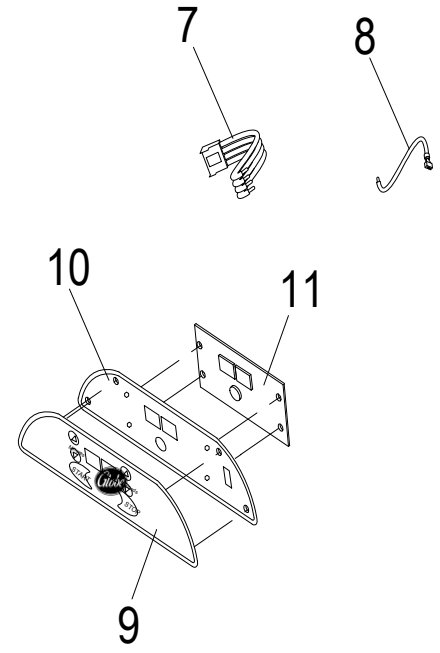

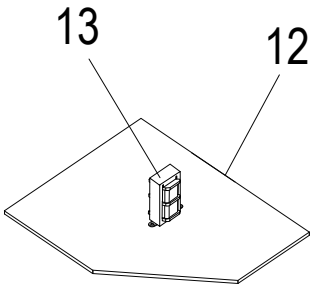

DIGITAL TIMER

© Globe Food Equipment Company

SP20 Digital Timer Components

Item	Part Number	Description		Qty	Serial Number
1	X10002	Control Panel		1	
1A	X10179	Cheese Hd Screw, Phillips M4-0.7X10mm, SS		4	
2	X10050	Emergency Stop Button		1	
3	X10049	Start Button		1	
3A	X10049-1	Boot, Start/Stop Switch Button	(Not Shown)	2	
4	X10137	Timer Kit		1	
4A	X10137-1	Timer Knob		1	
4B	X10296	Timer Assy W/Control Panel		1	
5		Contactor Mounting Plate	Int. Elect. Sys.	1	
6	X20028ABB	Contactor	Int. Elect. Sys.	1	
7	X00675-1	Wire Harness		1	
8	X00676	Control Board Wire		2	
9	X00565	Membrane		1	
10	X10336	Aluminum Panel Kit		1	
11	X00568	Control Board		1	
12	X02493	Mounting Plate & Bracket		1	
13	X00569	Transformer		1	
14	X00570	Fuse (250V/1A-Time Delay)	(Not Shown)	1	

© Globe Food Equipment Company

SP20 Bowl Scraper Components

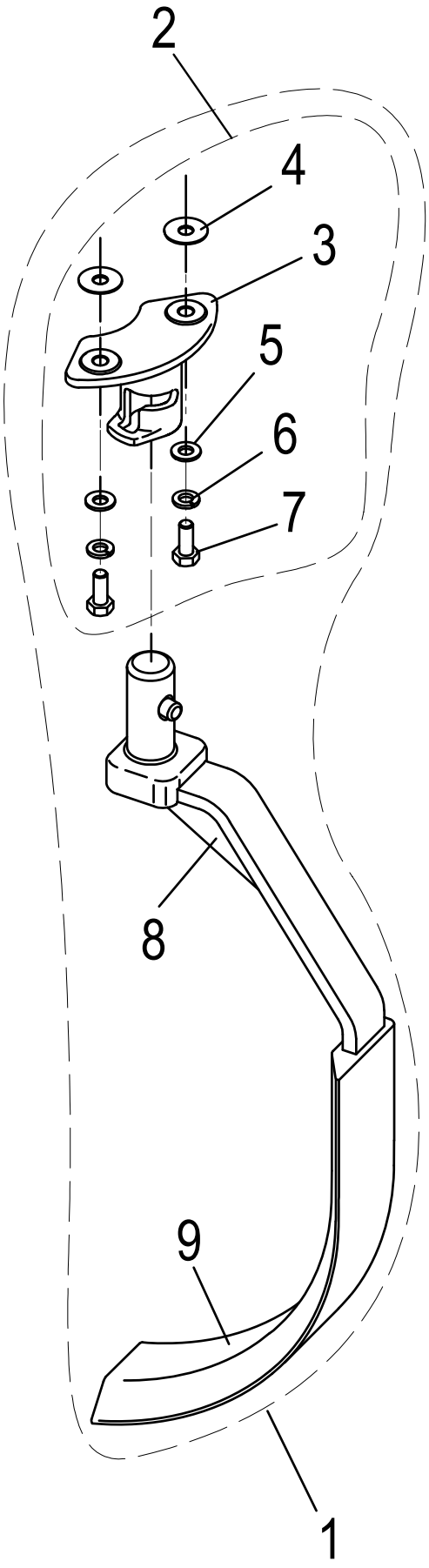

© Globe Food Equipment Company

SP20 Bowl Scraper Components

Item	Part Number	Description	Qty	Serial Number
1	XXSCRP-20	Bowl Scraper Assembly	1	
2	X03138	Scraper Mounting Kit	1	
3		Scraper Mounting Hub	1	
4		Washer	2	
5	H03141	Mounting Washer	2	
6	H03140	Mounting Lock Washer	2	
7	H03139	Mounting Screw	2	
8		Scraper Arm	1	
9	X00674	Rubber Scrapper	1	

© Globe Food Equipment Company

SP20 Wiring Diagram

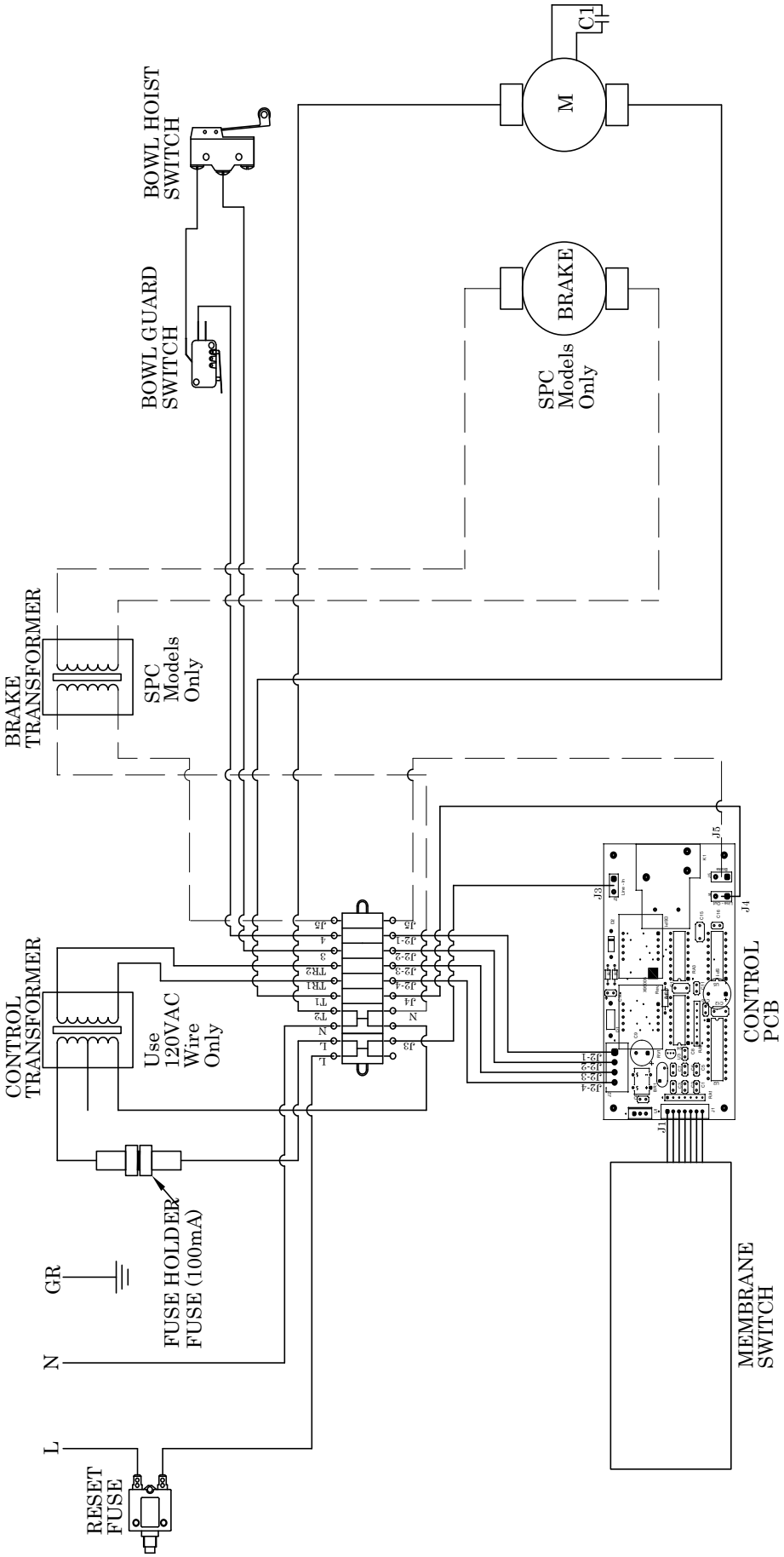

© Globe Food Equipment Company